Japan Display Inc.

FOR MESSRS : _____ DATE : Jul. 28th ,2023

CUSTOMER'S ACCEPTANCE SPECIFICATIONS

TX31D208VM0BVB

Contents

No.	ITEM	SHEET No.	PAGE
1	COVER	7B64PS 2701-TX31D208VM0BVB-3	1-1/1
2	RECORD OF REVISION	7B64PS 2702-TX31D208VM0BVB-3	2-1/1
3	GENERAL DATA	7B64PS 2703-TX31D208VM0BVB-3	3-1/1
4	ABSOLUTE MAXIMUM RATINGS	7B64PS 2704-TX31D208VM0BVB-3	4-1/1
5	ELECTRICAL CHARACTERISTICS	7B64PS 2705-TX31D208VM0BVB-3	5-1/2~2/2
6	OPTICAL CHARACTERISTICS	7B64PS 2706-TX31D208VM0BVB-3	6-1/2~2/2
7	BLOCK DIAGRAM	7B64PS 2707-TX31D208VM0BVB-3	7-1/1
8	RELIABILITY TESTS	7B64PS 2708-TX31D208VM0BVB-3	8-1/1
9	LCD INTERFACE	7B64PS 2709-TX31D208VM0BVB-3	9-1/9~9/9
10	OUTLINE DIMENSIONS	7B64PS 2710-TX31D208VM0BVB-3	10-1/2~2/2
11	TOUCH PANEL	7B64PS 2711-TX31D208VM0BVB-3	11-1/1
12	APPEARANCE STANDARD	7B64PS 2712-TX31D208VM0BVB-3	12-1/5~5/5
13	PRECAUTIONS	7B64PS 2713-TX31D208VM0BVB-3	13-1/2~2/2
14	DESIGNATION OF LOT MARK	7B64PS 2714-TX31D208VM0BVB-3	14-1/1

ACCEPTED BY: _____ PROPOSED BY: Oblack Tsai

2. RECORD OF REVISION

DATE	SHEET No.	SUMMARY
Jan.3,'23	7B64PS 2701-TX31D208VM0BVB-2 PAGE 1-1/1	Company logo changed : KOE JDI Taiwan Inc. → JDI Japan Display Inc.
	7B64PS 2714-TX31D208VM0BVB-2 PAGE 14-1/1	
Jul.28,'23	7B64PS 2708-TX31D208VM0BVB-3 PAGE 8-1/1	8. RELIABILITY TESTS Revised : Mechanical shock condition：150G/2ms→80G/10ms
	7B64PS 2701-TX31D208VM0BVB-3 PAGE 11-1/1	11.3 CONTROLLER CHARACTERISTICS Changed : Firmware information：0X2D478B→0X01A1AF

3. GENERAL DATA

3.1 DISPLAY FEATURES

This module is a 12.1” WXGA format amorphous silicon TFT. The pixel format is vertical stripe and sub pixels are arranged as R(red), G(green), B(blue) sequentially. This display is RoHS compliant, and COG (chip on glass) technology and LED backlight are applied on this display.

Part Name	TX31D208VM0BVB
Module Dimensions	303.0(W) mm × 205.1 (H) mm × 14.5 (D) mm (max)
LCD Active Area	261.12(W)mm x 163.2(H)mm
Pixel Pitch	0.204 (W) mm × 0.204 (H) mm
Resolution	1280× 3 (RGB) (W) × 800 (H) dots
Color Pixel Arrangement	RGB Vertical Stripe
LCD Type	Normally Black
Display Type	Active Matrix
Number of Colors	262k(6 bit/color), 16.7M(8 bit/color)
Backlight	Light Emitting Diode (LED)
Weight	1200g(typ)
Interface	LVDS (20 pins)
Power Supply Voltage	3.3V for LCD；30V for Backlight
Viewing Direction	Super Wide Version (In Plane switching)
Power Consumption	0.495W for LCD ;11.4W for backlight
Touch Panel	Projected Capacitive type ; G-G structure, I^2C I/F

4. ABSOLUTE MAXIMUM RATINGS

Item	Symbol	Min.	Max.	Unit	Remarks
Supply Voltage	V_{DD}	-0.3	4.0	V	-
Input Voltage of Logic	V_I	-0.3	V_{DD}	V	Note 1
Operating Temperature	Top	-40	80	˚C	Note 2
Storage Temperature	Tst	-40	80	˚C	Note 2
LED Forward Current	I_F	-	200	mA	-

Note 1: The rating is defined for the signal voltage of the interface such as CLK and pixel data pairs.

Note 2: The maximum rating is defined as above based on the glass surface temperature, which might be different from ambient temperature after assembling the panel into the application. Moreover, some temperature-related phenomenon as below needed to be noticed:

- Background color, contrast and response time would be different in temperatures other than 25 ˚C.
- Operating under high temperature will shorten LED lifetime.

5. ELECTRICAL CHARACTERISTICS

5.1 LCD CHARACTERISTICS

$T_a = 25\ ^{\circ}C,\ V_{SS} = 0V$

Item	Symbol	Condition	Min.	Typ.	Max.	Unit	Remarks
Power Supply Voltage	V_{DD}	-	3.0	3.3	3.6	V	-
Differential Input Voltage for LVDS Receiver Threshold	V_I	V_{IH}	-	-	+200	mV	Note 1
		V_{IL}	-200	-	-		
Power Supply Current	I_{DD}	V_{DD}-V_{SS} =3.3V	-	150	250	mA	Note 2,3
Frame Frequency	f_{Frame}	-	55	60	65	Hz	Note 4
CLK Frequency	f_{CLK}	-	66	67	71	MHz	
Logic Input Voltage	High	VIH	0.8xV_{DD}	-	V_{DD}	V	MODE,SD
	Low	VIL	0	-	0.2xV_{DD}	V	MODE,SD

Note 1: VCM 1.2V is common mode voltage of LVDS transmitter and receiver. The input terminal of LVDS transmitter is terminated with 100Ω.

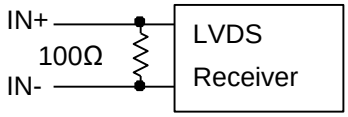

Note 2: An all white check pattern is used when measuring I_{DD}. f_{Frame} is set to 60Hz.

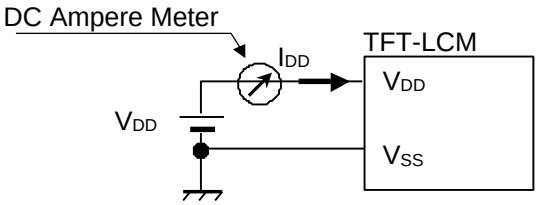

Note 3: 2A fuse is applied in the module for I_{DD}. For display activation and protection purpose, power supply is recommended larger than 5A to start the display and break fuse once any short circuit occurred.

Note 4: For LVDS transmitter input.

5.2 BACKLIGHT CHARACTERISTICS

$T_a = 25\ ^\circ C$

Item	Symbol	Condition	Min.	Typ.	Max.	Unit	Remarks
LED Input Voltage	V_{LED}	Backlight Unit	27	30	34	V	Note 1
LED Forward Current	I_{LED}	Per string	-	95	-	mA	-
LED Lifetime	-	I_{LED} = 95 mA	-	100K	-	hrs	Note 2

Note 1: Fig. 5.1 shows the LED backlight circuit. V_{LED} and I_{LED} is many-to-one relationship, the above V_{LED} range is defined to obtain 95mA per LED chain.

Note 2: The estimated lifetime is specified as the time to reduce 50% brightness by applying 95 mA at 25°C.

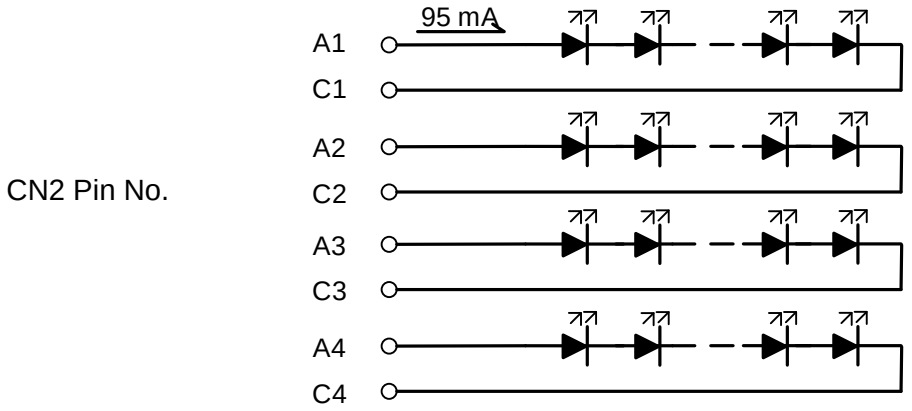

Fig 5.1

6. OPTICAL CHARACTERISTICS

The optical characteristics are measured based on the conditions as below:

- Supplying the signals and voltages defined in the section of electrical characteristics.
- The ambient temperature is 25°C.
- In the dark room less than 100 lx, the equipment has been set for the measurements as shown in Fig 6.1.

$T_a = 25\ ^{\circ}C$, $f_{Frame} = 60$ Hz, $V_{DD} = 3.3$V

Item		Symbol	Condition	Min.	Typ.	Max.	Unit	Remarks
Brightness of White		-	I_{LED}= 95mA $\phi = 0^{\circ}, \theta = 0^{\circ}$	1040	1300	-	cd/m^2	Note 1
Brightness Uniformity		-		70	-	-	%	Note 2
Contrast Ratio		CR		700	1000	-	-	Note 3
Response Time		Tr + Tf	$\phi = 0^{\circ}, \theta = 0^{\circ}$	-	25	30	ms	Note 4
NTSC Ratio		-	$\phi = 0^{\circ}, \theta = 0^{\circ}$	-	70	-	%	-
Viewing Angle		θx	$\phi = 0^{\circ}$, CR ≥ 10	75	88	-	Degree	Note 5
		$\theta x'$	$\phi = 180^{\circ}$, CR ≥ 10	75	88	-		
		θy	$\phi = 90^{\circ}$, CR ≥ 10	75	88	-		
		$\theta y'$	$\phi = 270^{\circ}$, CR ≥ 10	75	88	-		
Color Chromaticity	Red	X	$\phi = 0^{\circ}, \theta = 0^{\circ}$	0.609	0.649	0.689	-	Note 6
		Y		0.304	0.344	0.384		
	Green	X		0.269	0.309	0.349		
		Y		0.580	0.620	0.660		
	Blue	X		0.106	0.146	0.186		
		Y		0.052	0.092	0.132		
	White	X		0.273	0.313	0.353		
		Y		0.289	0.329	0.369		

Note 1: The brightness is measured from the center point of the panel, P5 in Fig. 6.2, for the typical value.

Note 2: The brightness uniformity is calculated by the equation as below:

$$\text{Brightness uniformity} = \frac{\text{Min. Brightness}}{\text{Max. Brightness}} \times 100\%$$

which is based on the brightness values of the 9 points measured by BM-5 as shown in Fig. 6.2.

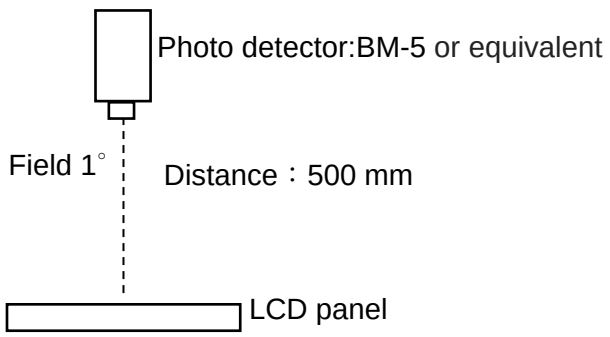

Fig. 6.1

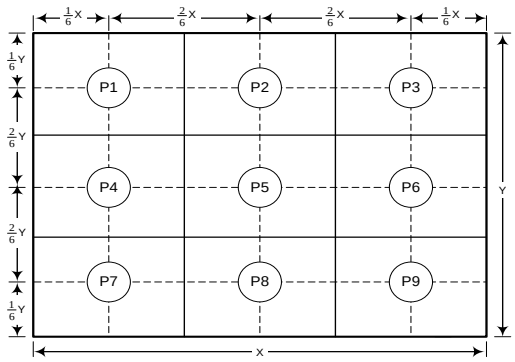

Fig. 6.2

Note 3: The Contrast ratio is measured from the center point of the panel, P5, and defined as the following equation:

$$CR = \frac{\text{Brightness of White}}{\text{Brightness of Black}}$$

Note 4: The definition of response time is shown in Fig. 6.3. The rising time is the period from 10% brightness to 90% brightness when the data is from black to white. Oppositely, Falling time is the period from 90% brightness rising to 10% brightness.

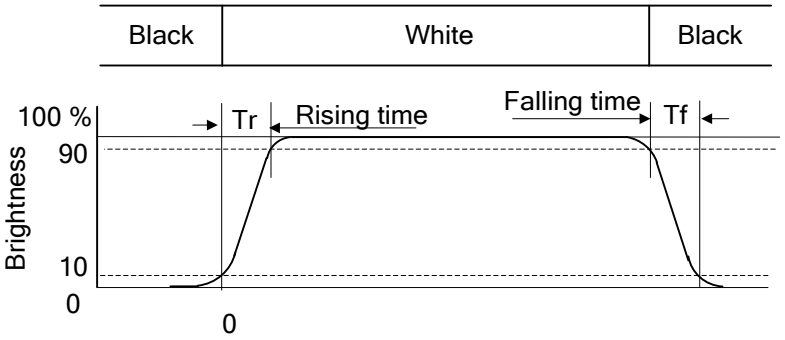

Fig. 6.3

Note 5: The definition of viewing angle is shown in Fig. 6.4. Angle ϕ is used to represent viewing directions, for instance, $\phi = 270^\circ$ means 6 o'clock, and $\phi = 0^\circ$ means 3 o'clock. Moreover, angle θ is used to represent viewing angles from axis Z toward plane XY.

The display is super wide viewing angle version, so that the best optical performance can be obtained from every viewing direction.

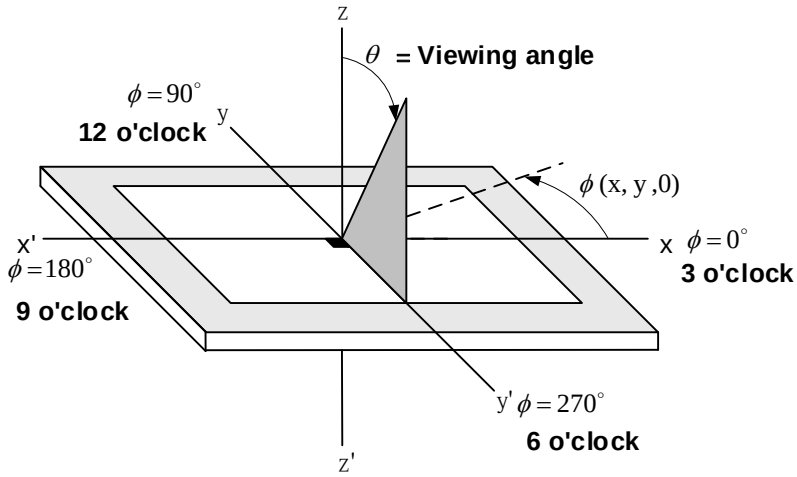

Fig. 6.4

Note 6: The color chromaticity is measured from the center point of the panel, P5, as shown in Fig. 6.2.

7. BLOCK DIAGRAM

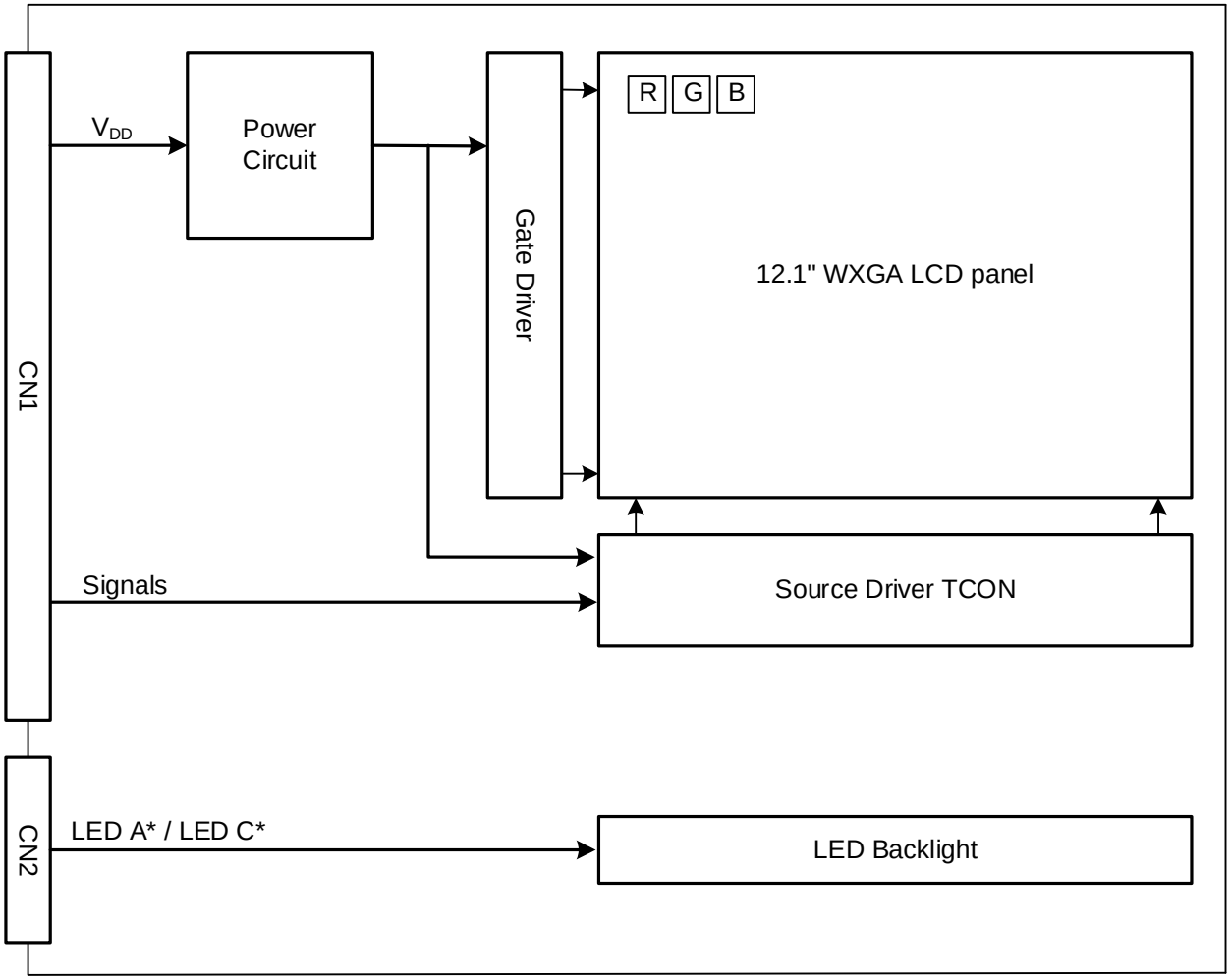

Note :1 Signals are SD, CLK and pixel data pairs.

8. RELIABILITY TESTS

Test Item	Condition	
High Temperature	1) Operating 2) 80°C	240 hrs
Low Temperature	1) Operating 2) -40°C	240 hrs
High Temperature	1) Storage 2) 80°C	240 hrs
Low Temperature	1) Storage 2) -40°C	240 hrs
Heat Cycle	1) Operating 2) –40°C ~80°C 3) 3hrs~1hr~3hrs	240 hrs
Thermal Shock	1) Non-Operating 2) -35°C↔85°C 3) 0.5 hr↔0.5 hr	240 hrs
High Temperature & Humidity	1) Operating 2) 65°C & 85%RH 3) Without condensation	240 hrs (Note 3)
Vibration	1) Non-Operating 2) 20～300 Hz 3) 6.8G 4) X, Y, and Z directions	1 hrs for each direction
Mechanical Shock	1) Non-Operating 2) 10 ms 3) 80G 4) ±X, ±Y and ±Z directions	Once for each direction
ESD	1) Operating 2) Tip: 150 pF, 330Ω 3) Air discharge for glass: ±12KV 4) Contact discharge for metal frame: ±15KV	1) Glass: 9 points 2) Metal frame: 8 points (Note4)

Note 1: Display functionalities are inspected under the conditions defined in the specification after the reliability tests.

Note 2: The display is not guaranteed for use in corrosive gas environments.

Note 3: Under the condition of high temperature & humidity, if the temperature is higher than 65℃, the humidity needs to be reduced as Fig. 8.1 shown.

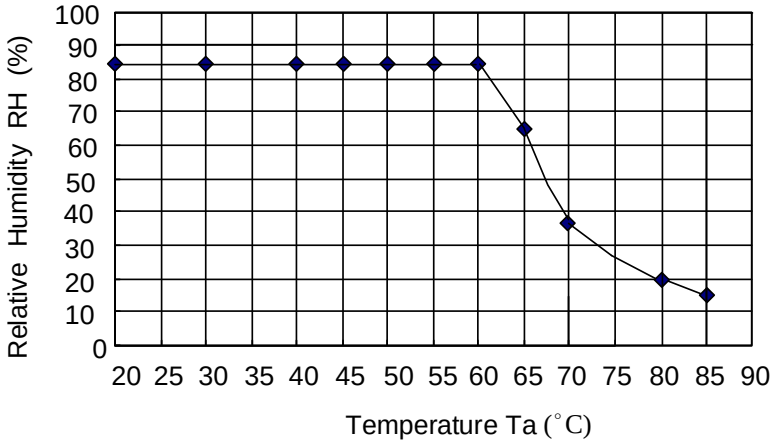

Fig. 8.1

Note 4: All pins of LCD interface (CN1) have been tested by ±100V contact discharge of ESD under non-operating condition.

9. LCD INTERFACE

9.1 INTERFACE PIN CONNECTIONS

The display interface connector (CN1) is 20186-020E-11F made by I-PEX and pin assignment is as below:

Pin No.	Signal	Function (MODE = Low)		Function (MODE = High)
		6 bit input	8 bit input	8 bit input
1	V_{DD}	+3.3V Power Supply for Logic		+3.3V Power Supply for Logic
2	V_{DD}	+3.3V Power Supply for Logic		+3.3V Power Supply for Logic
3	V_{SS}	GND		GND
4	V_{SS}	GND		GND
5	Link 0-	R0~R5, G0	R2~R7, G2	R0~R5, G0
6	Link 0+	R0~R5, G0	R2~R7, G2	R0~R5, G0
7	V_{SS}	GND		GND
8	Link 1-	G1~G5, B0~B1	G3~G7, B2~B3	G1~G5, B0~B1
9	Link 1+	G1~G5, B0~B1	G3~G7, B2~B3	G1~G5, B0~B1
10	V_{SS}	GND		GND
11	Link 2-	B2~B5, DE	B4~B7, DE	B2~B5, DE
12	Link 2+	B2~B5, DE	B4~B7, DE	B2~B5, DE
13	V_{SS}	GND		GND
14	CLK IN-	Pixel Clock -		Pixel Clock -
15	CLK IN+	Pixel Clock +		Pixel Clock +
16	V_{SS}	GND		GND
17	Link 3-	See:*2)	R0~R1, G0~G1, B0~B1	R6~R7, G6~G7, B6~B7
18	Link 3+	See:*2)	R0~R1, G0~G1, B0~B1	R6~R7, G6~G7, B6~B7
19	MODE	Low= 6bit / 8bit		High= 8bit
20	SD	Scan direction control (Low = Normal, High = Reverse=Default)		

Note 1: Link n- and Link n+ (n=0, 1, 2, 3), CLK IN- and CLK IN+ should be wired by twist-pairs.

Note 2: The Pin 19 (MODE) and Pin 20 (SC) are set high by the internal resistor of the driver IC.
Suggest to set high or pull GND instead floating.

Note 3: The Pin 17 and Pin 18 should be set the constant level of the LVDS format in the JEIDA 6 bits Mode.

Reference only

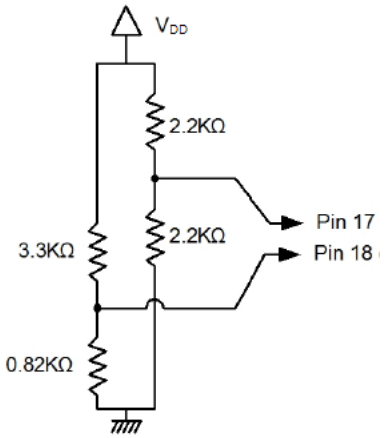

The display interface connector (CN2) is FI-S8P-HFE-E1500 made by JAE, and pin assignment is as below:

Pin No.	Symbol	Function
1	C1	LED Cathode1
2	A1	LED Anode1
3	A2	LED Anode2
4	C2	LED Cathode2
5	C3	LED Cathode3
6	A3	LED Anode3
7	A4	LED Anode4
8	C4	LED Cathode4

(3) The touch panel connector (CN3) is SM12B-SHLS-TF(LF)(SN) made by JST, and pin assignment is as below:

Pin No.	Symbol	Function	Note
1	V_{DD3V3}	Touch panel controller power supply	Note 2
2	NC	-	Note 1
3	NC	-	Note 1
4	GND_L	Touch panel controller GND	
5	NC	-	Note 1
6	INT	Interrupt signal (Output)	
7	SCL	I^2C SCL	
8	SDA	I^2C SDA	
9	nRESET	Reset signal (Input)	
10	NC	-	Note 1
11	NC	-	Note 1
12	V_{DD3V3}	Touch panel controller power supply	Note 2

Note 1: Please don’t use Pin No 2.3.5.10.11 because they are for internal use only.

Note 2: Pin1 and Pin12 are connected together on the touch panel controller board.

9.2 LVDS DATA FORMAT

9.2.1 MODE = Low (6 bit input)

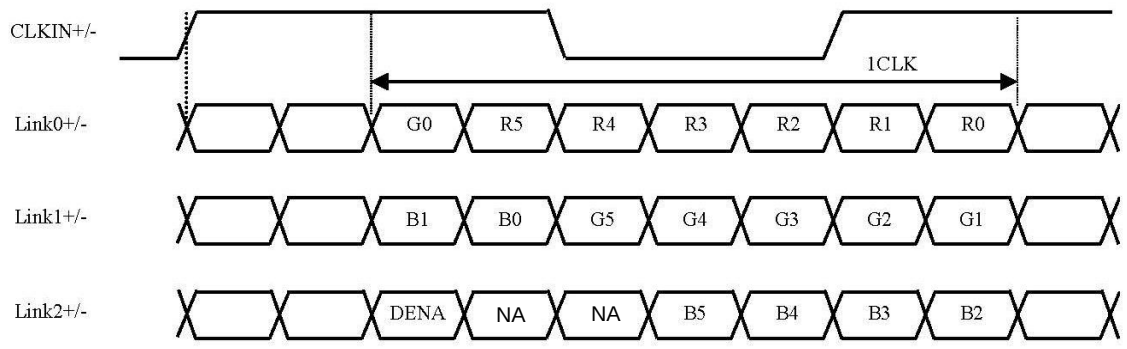

9.2.2 MODE = Low (8 bit input)

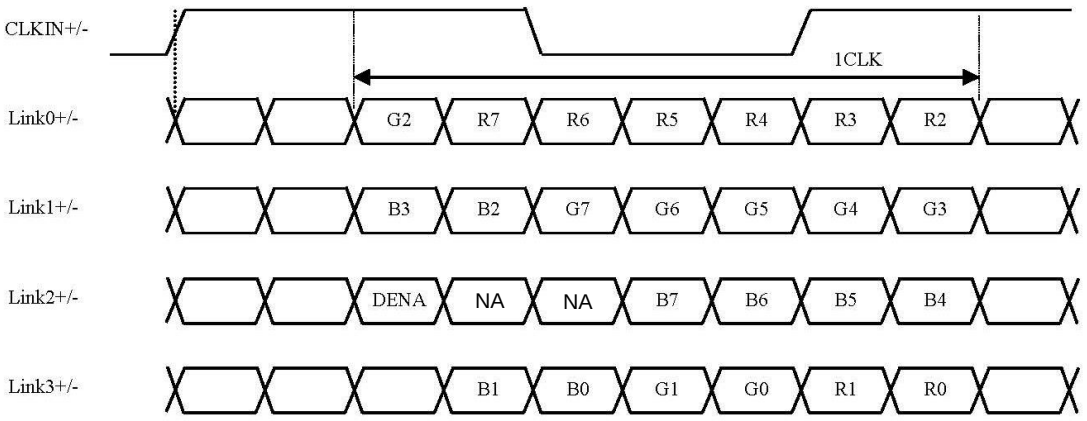

9.2.3 MODE = High (8 bit input)

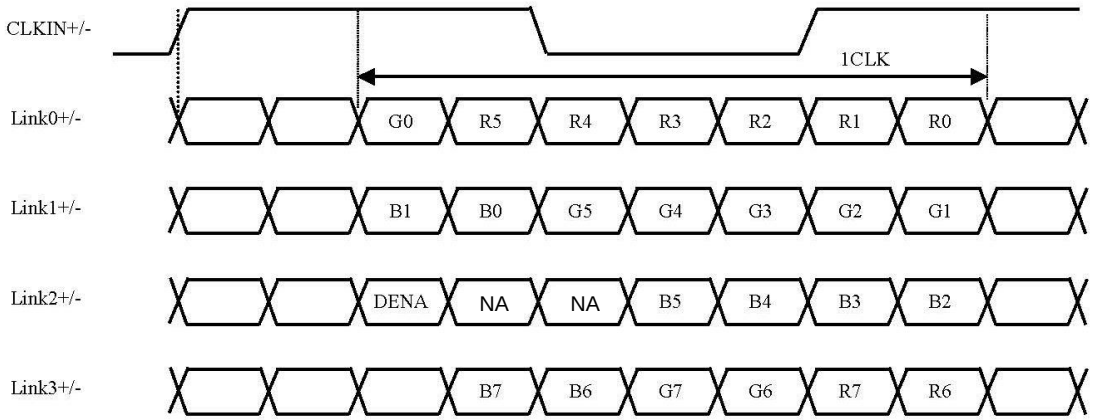

9.3 TIMING CHART

9.3.1 Horizontal Timing

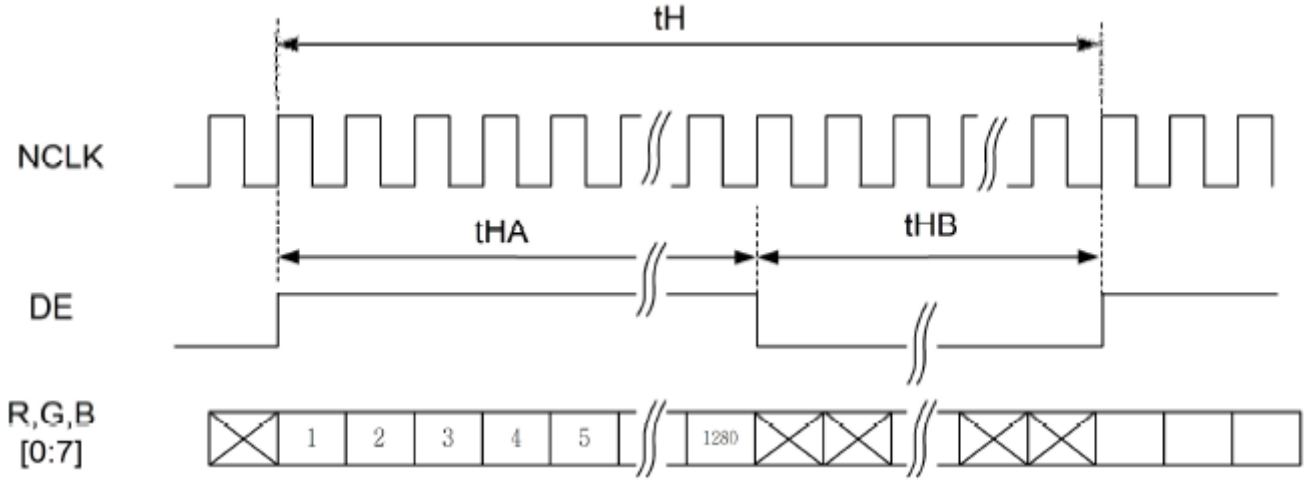

9.3.2 Vertical Timing

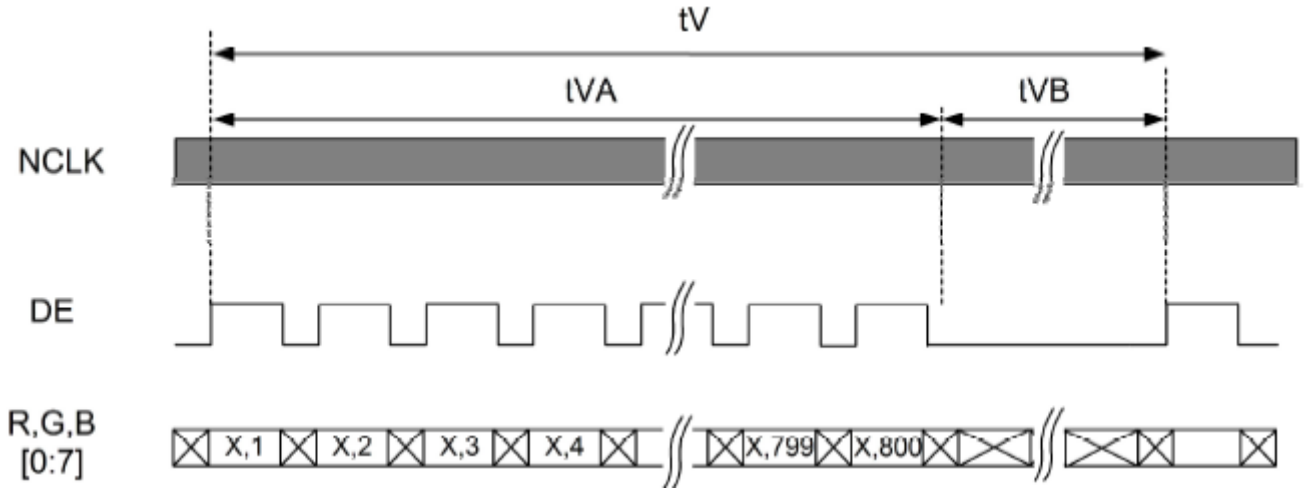

Note 1: All timing parameters should be constant in each frame.

Note 2: Blanking time tolerance (Base on IC specification) :3 ≧ | tVBn－tVBn-1 | ≧ 0

9.4 TIME TABLE

The column of timing sets including minimum, typical, and maximum as below are based on the best optical performance, frame frequency = 60 Hz to define. If 60 Hz is not the aim to set, less than 65 Hz for vertical frequency is recommended to apply for better performance by other parameter combination as the definitions in section 5.1.

Item		Symbol	Min.	Typ.	Max.	Unit
Horizontal	CLK Frequency	fclk	66	67	71	M Hz
	Display Data	tHA	1280			CLK
	Cycle Time	tHB	70	80	90	
Vertical	Display Data	tVA	800			H
	Cycle Time	tVB	10	20	70	
	Frequency	fv	55	60	65	Hz

9.5 DISPLAY MODE CONTROL

Scan direction is available to be switched as below by setting CN1's SD pin.

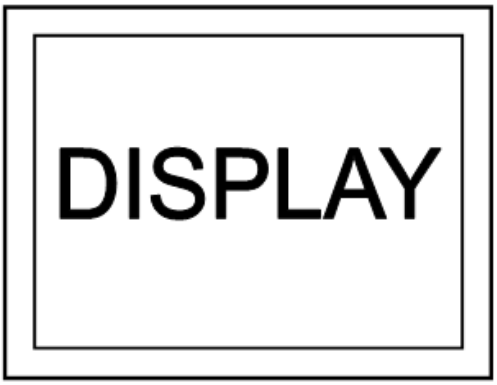

SD : Low

SD : High / Default

9.6 LVDS RECEIVER TIMING

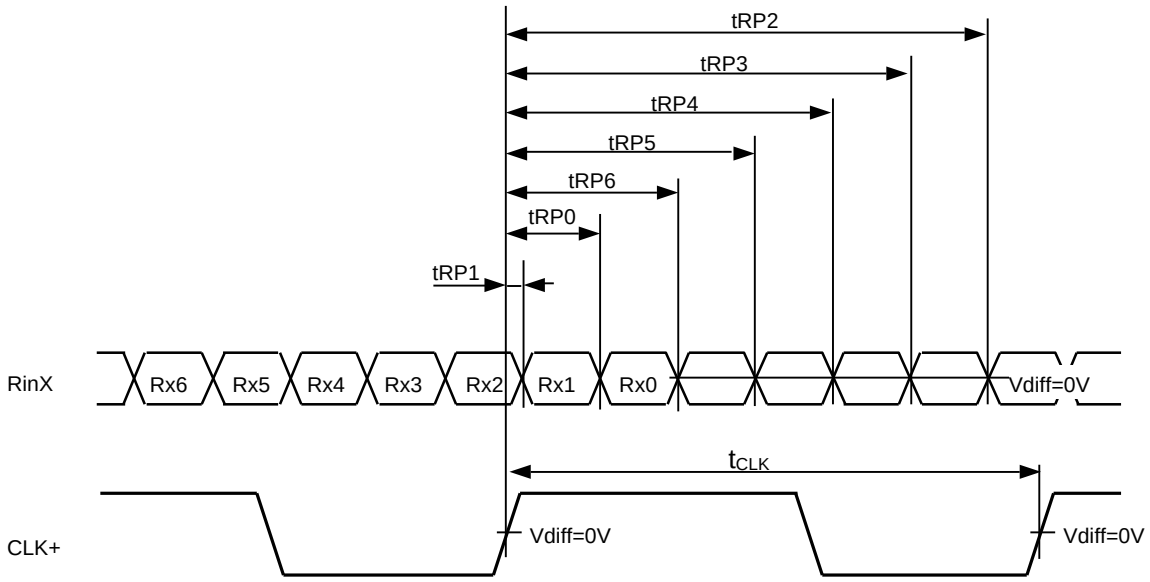

RinX= (RinX+)-(RinX-) (X=0, 1, 2, 3)

Item		Symbol	Min.	Typ.	Max.	Unit
CLK	Cycle frequency	1/t_{CLK}	66	67	71	MHz
1 date bit time	-	UI		1/7		t_{CLK}
RinX (X=0,1,2,3)	0 data position	tRP0	0.75	1	1.25	UI
	1st data position	tRP1	-0.25	0	0.25	
	2nd data position	tRP2	5.75	6	6.25	
	3rd data position	tRP3	4.75	5	5.25	
	4th data position	tRP4	3.75	4	4.25	
	5th data position	tRP5	2.75	3	3.25	
	6th data position	tRP6	1.75	2	2.25	

9.7 POWER SEQUENCE

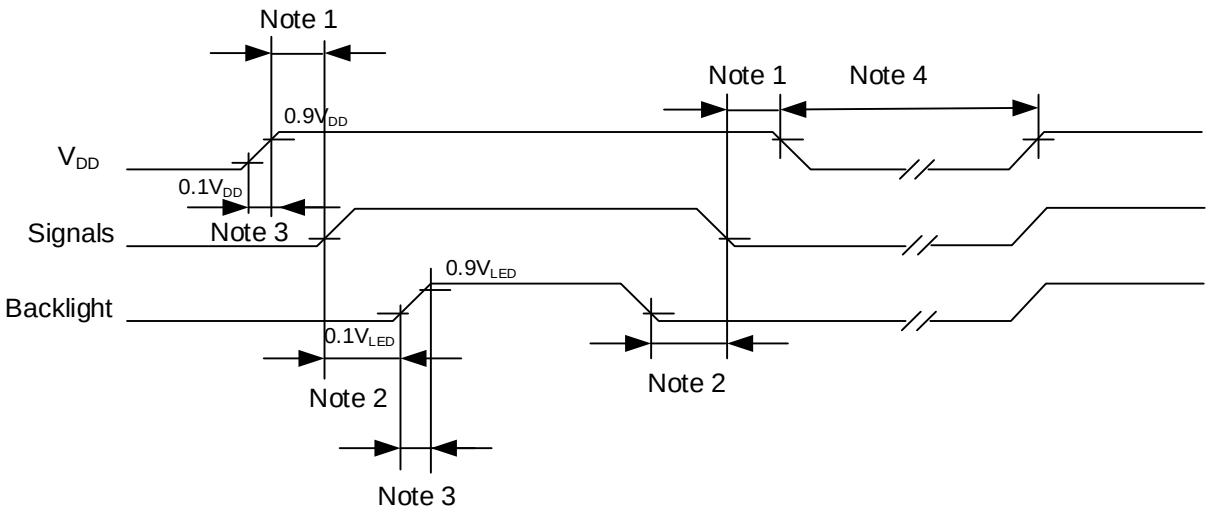

Note 1: In order to avoid any damages, V_{DD} has to be applied before all other signals. The opposite is true for power off where V_{DD} has to be remained on until all other signals have been switch off. The recommended time period is 1 second.

Note 2: In order to avoid showing uncompleted patterns in transient state. It is recommended that switching the backlight on is delayed for 1 second after the signals have been applied. The opposite is true for power off where the backlight has to be switched off 1 second before the signals are removed.

Note 3 : In order to avoid high Inrush current, VDD & VLED rising time need to set at 0.5ms < VDD & VLED < 10ms.

Note 4 : In order to avoid any damages, the interval time from power off to power on shall be 1 second minimum.

9.8 DATA INPUT for DISPLAY COLOR

9.8.1 6bit input

Input color		Red Data						Green Data						Blue Data					
		R5	R4	R3	R2	R1	R0	G5	G4	G3	G2	G1	G0	B5	B4	B3	B2	B1	B0
		MSB					LSB	MSB					LSB	MSB					LSB
Basic Color	Black	0	0	0	0	0	0	0	0	0	0	0	0	0	0	0	0	0	0
	Red(63)	1	1	1	1	1	1	0	0	0	0	0	0	0	0	0	0	0	0
	Green(63)	0	0	0	0	0	0	1	1	1	1	1	1	0	0	0	0	0	0
	Blue(63)	0	0	0	0	0	0	0	0	0	0	0	0	1	1	1	1	1	1
	Cyan	0	0	0	0	0	0	1	1	1	1	1	1	1	1	1	1	1	1
	Magenta	1	1	1	1	1	1	0	0	0	0	0	0	1	1	1	1	1	1
	Yellow	1	1	1	1	1	1	1	1	1	1	1	1	0	0	0	0	0	0
	White	1	1	1	1	1	1	1	1	1	1	1	1	1	1	1	1	1	1
Red	Red(1)	0	0	0	0	0	1	0	0	0	0	0	0	0	0	0	0	0	0
	Red(2)	0	0	0	0	1	0	0	0	0	0	0	0	0	0	0	0	0	0
	:	:	:	:	:	:	:	:	:	:	:	:	:	:	:	:	:	:	:
	:	:	:	:	:	:	:	:	:	:	:	:	:	:	:	:	:	:	:
	Red(62)	1	1	1	1	1	0	0	0	0	0	0	0	0	0	0	0	0	0
	Red(63)	1	1	1	1	1	1	0	0	0	0	0	0	0	0	0	0	0	0
Green	Green(1)	0	0	0	0	0	0	0	0	0	0	0	1	0	0	0	0	0	0
	Green(2)	0	0	0	0	0	0	0	0	0	0	1	0	0	0	0	0	0	0
	:	:	:	:	:	:	:	:	:	:	:	:	:	:	:	:	:	:	:
	:	:	:	:	:	:	:	:	:	:	:	:	:	:	:	:	:	:	:
	Green(62)	0	0	0	0	0	0	1	1	1	1	1	0	0	0	0	0	0	0
	Green(63)	0	0	0	0	0	0	1	1	1	1	1	1	0	0	0	0	0	0
Blue	Blue(1)	0	0	0	0	0	0	0	0	0	0	0	0	0	0	0	0	0	1
	Blue(2)	0	0	0	0	0	0	0	0	0	0	0	0	0	0	0	0	1	0
	:	:	:	:	:	:	:	:	:	:	:	:	:	:	:	:	:	:	:
	:	:	:	:	:	:	:	:	:	:	:	:	:	:	:	:	:	:	:
	Blue(62)	0	0	0	0	0	0	0	0	0	0	0	0	1	1	1	1	1	0
	Blue(63)	0	0	0	0	0	0	0	0	0	0	0	0	1	1	1	1	1	1

Note 1: Definition of gray scale : Color(n) Number in parenthesis indicates gray scale level. Larger number corresponds to brighter level.

Note 2: Data Signal : 1 : High, 0 : Low

9.8.2 8bit input

Input color		Red Data								Green Data								Blue Data							
		R7	R6	R5	R4	R3	R2	R1	R0	G7	G6	G5	G4	G3	G2	G1	G0	B7	B6	B5	B4	B3	B2	B1	B0
		MSB							LSB	MSB							LSB	MSB							LSB
Basic Color	Black	0	0	0	0	0	0	0	0	0	0	0	0	0	0	0	0	0	0	0	0	0	0	0	0
	Red(255)	1	1	1	1	1	1	1	1	0	0	0	0	0	0	0	0	0	0	0	0	0	0	0	0
	Green(255)	0	0	0	0	0	0	0	0	1	1	1	1	1	1	1	1	0	0	0	0	0	0	0	0
	Blue(255)	0	0	0	0	0	0	0	0	0	0	0	0	0	0	0	0	1	1	1	1	1	1	1	1
	Cyan	0	0	0	0	0	0	0	0	1	1	1	1	1	1	1	1	1	1	1	1	1	1	1	1
	Magenta	1	1	1	1	1	1	1	1	0	0	0	0	0	0	0	0	1	1	1	1	1	1	1	1
	Yellow	1	1	1	1	1	1	1	1	1	1	1	1	1	1	1	1	0	0	0	0	0	0	0	0
	White	1	1	1	1	1	1	1	1	1	1	1	1	1	1	1	1	1	1	1	1	1	1	1	1
Red	Black	0	0	0	0	0	0	0	0	0	0	0	0	0	0	0	0	0	0	0	0	0	0	0	0
	Red(1)	0	0	0	0	0	0	0	1	0	0	0	0	0	0	0	0	0	0	0	0	0	0	0	0
	Red(2)	0	0	0	0	0	0	1	0	0	0	0	0	0	0	0	0	0	0	0	0	0	0	0	0
	:	:	:	:	:	:	:	:	:	:	:	:	:	:	:	:	:	:	:	:	:	:	:	:	:
	Red(253)	1	1	1	1	1	1	0	1	0	0	0	0	0	0	0	0	0	0	0	0	0	0	0	0
	Red(254)	1	1	1	1	1	1	1	0	0	0	0	0	0	0	0	0	0	0	0	0	0	0	0	0
	Red(255)	1	1	1	1	1	1	1	1	0	0	0	0	0	0	0	0	0	0	0	0	0	0	0	0
Green	Black	0	0	0	0	0	0	0	0	0	0	0	0	0	0	0	0	0	0	0	0	0	0	0	0
	Green(1)	0	0	0	0	0	0	0	0	0	0	0	0	0	0	0	1	0	0	0	0	0	0	0	0
	Green(2)	0	0	0	0	0	0	0	0	0	0	0	0	0	0	1	0	0	0	0	0	0	0	0	0
	:	:	:	:	:	:	:	:	:	:	:	:	:	:	:	:	:	:	:	:	:	:	:	:	:
	Green(253)	0	0	0	0	0	0	0	0	1	1	1	1	1	1	0	1	0	0	0	0	0	0	0	0
	Green(254)	0	0	0	0	0	0	0	0	1	1	1	1	1	1	1	0	0	0	0	0	0	0	0	0
	Green(255)	0	0	0	0	0	0	0	0	1	1	1	1	1	1	1	1	0	0	0	0	0	0	0	0
Blue	Black	0	0	0	0	0	0	0	0	0	0	0	0	0	0	0	0	0	0	0	0	0	0	0	0
	Blue(1)	0	0	0	0	0	0	0	0	0	0	0	0	0	0	0	0	0	0	0	0	0	0	0	1
	Blue(2)	0	0	0	0	0	0	0	0	0	0	0	0	0	0	0	0	0	0	0	0	0	0	1	0
	:	:	:	:	:	:	:	:	:	:	:	:	:	:	:	:	:	:	:	:	:	:	:	:	:
	Blue(253)	0	0	0	0	0	0	0	0	0	0	0	0	0	0	0	0	1	1	1	1	1	1	0	1
	Blue(254)	0	0	0	0	0	0	0	0	0	0	0	0	0	0	0	0	1	1	1	1	1	1	1	0
	Blue(255)	0	0	0	0	0	0	0	0	0	0	0	0	0	0	0	0	1	1	1	1	1	1	1	1

Note 1: Definition of gray scale : Color(n) Number in parenthesis indicates gray scale level. Larger number corresponds to brighter level.

Note 2: Data Signal : 1 : High, 0 : Low

10. OUTLINE DIMENSIONS

10.1 FRONT VIEW

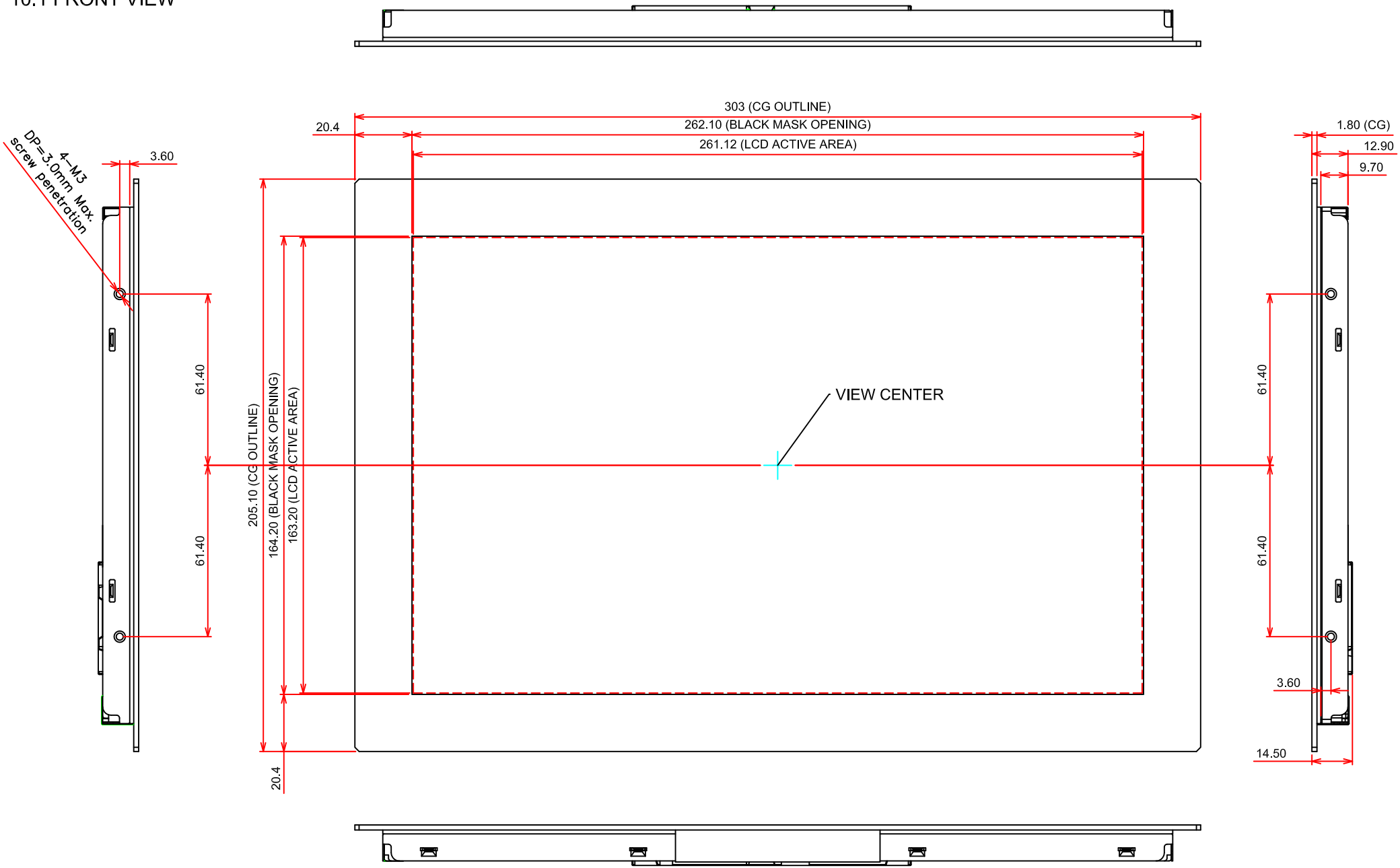

General Tolerance:±0.5mm
Scale : NTS
Unit : mm

JDI Taiwan Inc. Kaohsiung Branch	SHEET No.	7B64PS 2710-TX31D208VM0BVB-3	PAGE	10-1/2

10.2 REAR VIEW

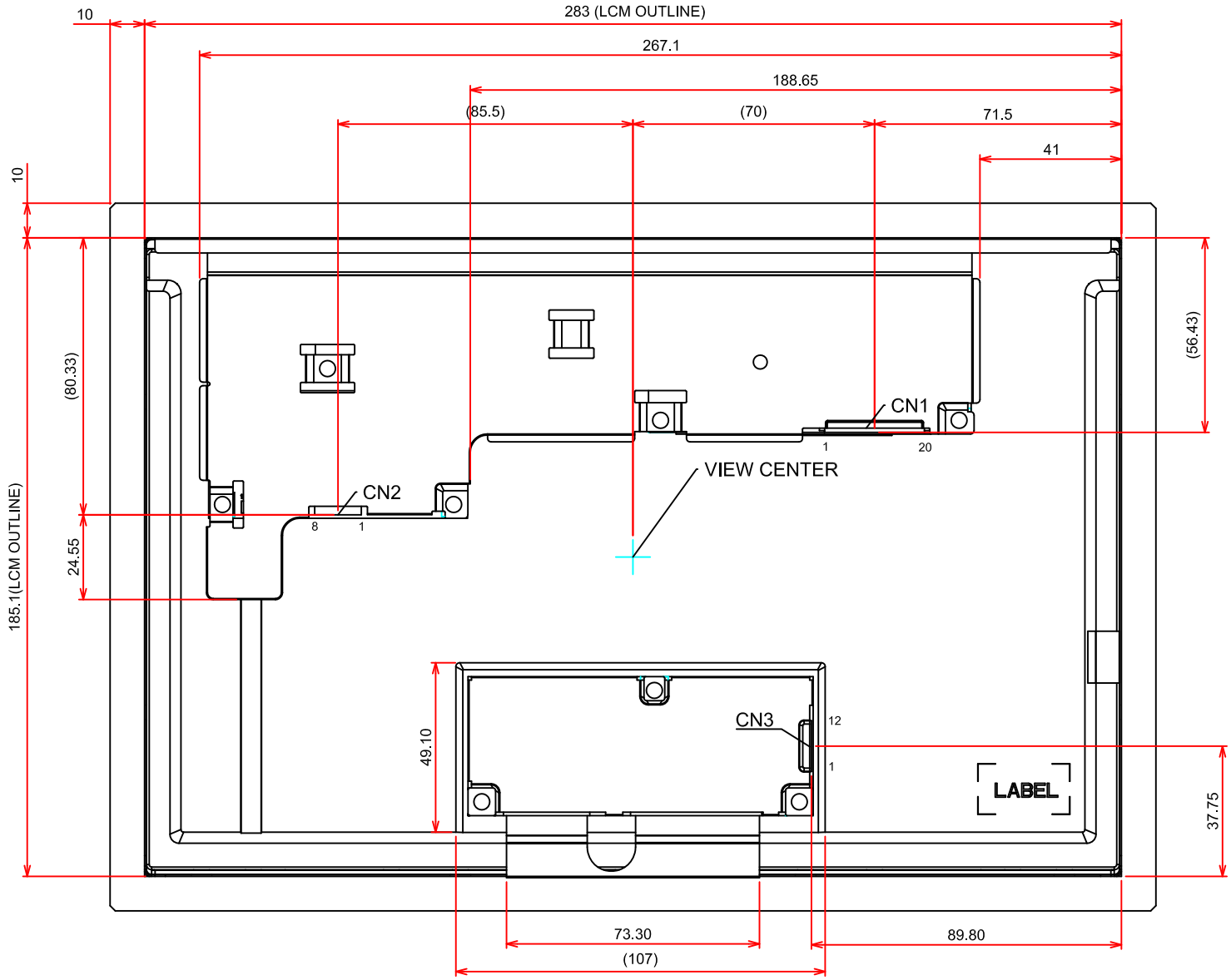

General Tolerance:±0.5mm
Scale : NTS
Unit : mm

Note 1) CN1 : 20186-020E-11F (I-PEX)
CN2 : FI-S8P-HFE-E1500 (JAE)
CN3 : SM12B-SHLS-TF(LF)(SN) (JST)

11. TOUCH PANEL

The type of touch panel used on this display is capacitive touch panel film, and more characteristics are shown as below:

11.1 MECHANICAL CHARACTERISTICS

Item	Specification	Remarks
Thickness	t = 2.7 ± 0.2mm	-
Cover Glass	t = 1.8 ± 0.2mm	Strengthened Glass
CG Material	Soda lime	
Surface Hardness	7H	-
Input Method	Through a special stylus or finger	-
Touch Panel	10 points	-

11.2 ELECTRICAL CHARACTERISTICS

Item	Symbol	Value			Unit	Remarks
		Min.	Typ.	Max.		
Power supply voltage(Digital)	V_{DD3V3}	-0.3	3.3	+3.6	V	Note1
Power supply voltage(Analog)	AV_{DD}	-0.3	3.3	+3.6	V	
Operation current	Idd	-	27.1	-	mA	
Input high level voltage	V_{IH}	0.7 x VDD	-	VDD	V	
Input low level voltage	V_{IL}	-0.3	-	0.3 x VDD	V	
Output high voltage	V_{OH}	0.8 x VDD	-	VDD	V	
Output low voltage	V_{OL}	0	-	0.2 xVDD	V	

Note 1: V_{DD3v3} and AV_{DD} noise should be less than 100μV RMS over the range 10 HZ to 1MHZ,
V_{DD3v3} and AV_{DD} ripple should be less than 50mV over the range 1HZ to 1MHZ.

11.3 CONTROLLER CHARACTERISTICS

The Capacitive Touch Panel features as below:

- Controller IC is ATMEL MXT1665TD-AT
- Interface：I^2C
- Firmware information：0X01A1AF

12. APPEARANCE STANDARD

The appearance inspection is performed in a room around 500~1000 lx based on the conditions as below:

- The distance between inspector's eyes and display is 30 cm.
- The viewing zone is defined with angle θ shown in Fig. 12.1 The inspection should be performed within 45° when display is shut down. The inspection should be performed within 5° when display is power on.

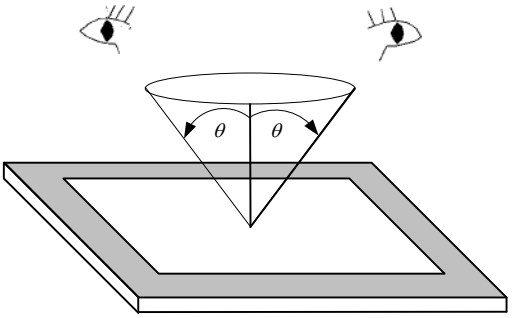

Fig. 12.1

12.1 THE DEFINITION OF LCD ZONE

LCD panel is divided into 3 areas as shown in Fig.12.2 for appearance specification in next section. A zone is the LCD active area (dot area); B zone is the area between A zone and metal frame.

In terms of housing design, B zone is the recommended window area customers' housing should be located in.

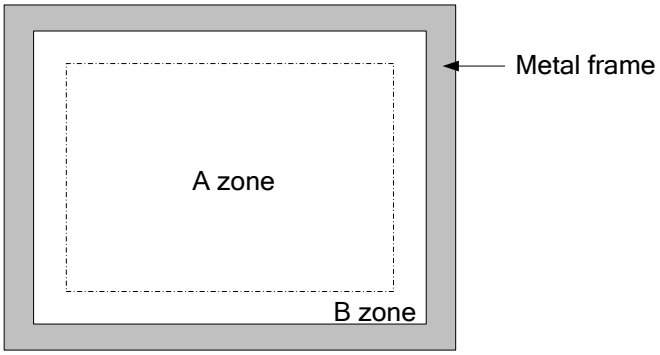

Fig. 12.2

12.2 LCD APPEARANCE SPECIFICATION

The specification as below is defined as the amount of unexpected phenomenon or material in different zones of LCD panel. The definitions of length, width and average diameter using in the table are shown in Fig. 12.3 and Fig. 12.4.

Item	Criteria				Applied zone
Scratches	Length (mm)	Width (mm)	Maximum number	Minimum space	A, B
	-	W≦0.1	Ignored	-	
	1<L≦5	0.1<W≦0.2	3	-	
	5<L	0.2＜W	Not allowed	-	
Dent	Serious one is not allowed				A
Wrinkles in polarizer	Serious one is not allowed				A
Bubbles on polarizer	Average diameter (mm)		Maximum number		A
	D≦0.2		Ignored		
	0.2＜D≦0.5		4		
	0.5＜D		Not allowed		
1) Stains 2) Foreign Materials 3) Bright/Dark Spot	Filamentous (Line shape)				A, B
	Length (mm)	Width (mm)	Maximum number		
	-	W≦0.1	Ignored		
	0.3≦L≦2	0.1＜W≦0.2	3		
	2＜L	0.2＜W	Not allowed		
	Round (Dot shape)				A, B
	Average diameter (mm)	Maximum number	Minimum Space		
	D≦0.2	Ignored	-		
	0.2＜D≦0.5	4	-		
	0.5＜D	Not allowed	-		
	Those wiped out easily are acceptable				
Dot-Defect (Note 1)		Type	Maximum number		A
	Bright dot-defect	1 dot	0		
	Dark dot-defect	1 dot	4		
		2 adjacent dot	Not allowed		
	Minimum distance between dark dots≧5mm				
Mura	Invisible through 2% ND filter				A (Note 2)

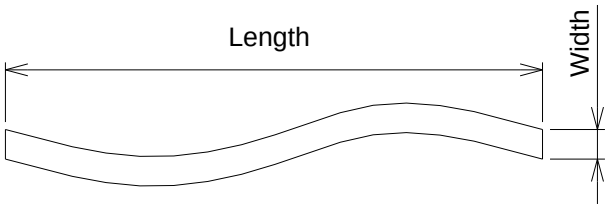

Fig 12.3

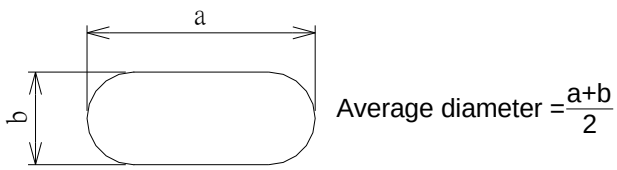

Fig 12.4

Note 1: The definitions of dot defect are as below:

- For bright dot-defect, showing black pattern, defect size over 1/2 dot area is defined.
- For dark dot-defect, showing white pattern, defect size over 1/2 dot area is defined.
- The definition of 1-dot-defect is the defect-dot, which is isolated and no adjacent defect-dot.
- The definition of adjacent dot is shown as Fig. 12.5.

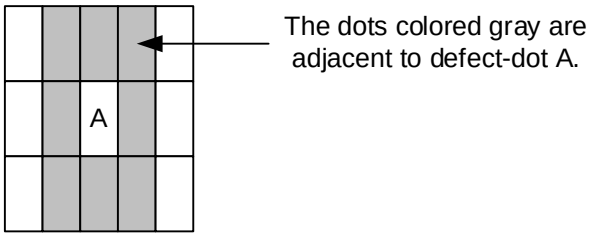

Fig. 12.5

Note 2: The inspection method with ND Filter is to hold it in front of the panel around 1 cm and inspect the panel with 35±5 cm distance for 1 second.

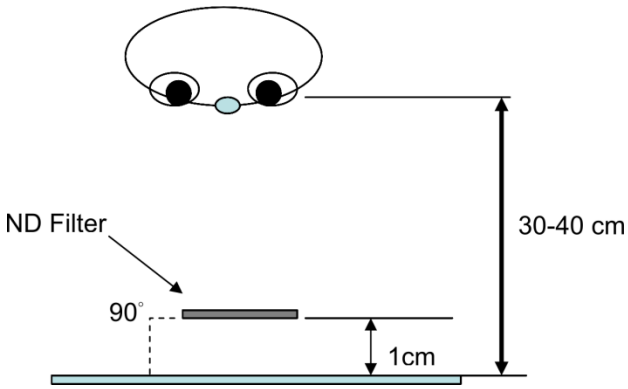

12.3 TOUCH PANEL APPEARANCE SPECIFICATION

The specification as below is defined by the amount of unexpected material in different zones of touch panel.

Item	Criteria				Applied zone
Scratches	Width (mm)	Length (mm)	Maximum number	Minimum Space	A
	W≦0.05	-	Ignored	-	
	0.05＜W≦0.1	L≦20	5	10mm	
	0.1＜W≦0.25	L≦10	3	10mm	
	0.25＜W	L＞20	Not allowed	-	
	W≦0.05	-	Ignored	-	B
	0.05＜W≦0.1	L≦20	3	10mm	
	0.1＜W≦0.25	L≦10	2	10mm	
	0.25＜W	L＞20	Not allowed	-	
Foreign Materials (Include contamination, black or white dots /spots)	Round (Dot shape)				A
	Average diameter (mm)	Maximum number	Minimum Space		
	D≦0.3	Ignored	-		
	0.3＜D≦0.5	5	5mm		
	0.5＜D≦0.8	3	10mm		
	0.8＜D	Not allowed	-		
	D≦0.3	Ignored	-		B
	0.3＜D≦0.8	5	10mm		
	0.8＜D	Not allowed	-		
Bubble	Round (Dot shape)				A
	Average diameter (mm)	Maximum number	Minimum Space		
	D≦0.3	Ignored	-		
	0.3＜D≦0.5	5	5mm		
	0.5＜D≦0.8	3	10mm		
	0.8＜D	Not allowed	-		
	D≦0.3	Ignored	-		B
	0.3＜D≦0.8	5	10mm		
	0.8＜D	Not allowed	-		
Pin hole	Round (Dot shape)				A
	Average diameter (mm)	Maximum number	Minimum Space		
	D≦0.3	Ignored	-		
	0.3＜D≦0.5	5	5mm		
	0.5＜D≦0.8	3	10mm		
	0.8＜D	Not allowed	-		
	D≦0.3	B	-		B
	0.3＜D≦0.8	5	10mm		
	0.8＜D	Not allowed	-		

The limitation of glass flaw occurred on touch panel is defined in the table as below.

a) Chipping on the cover glass(faceplate)：

Item	Specifications	
Edge flaw	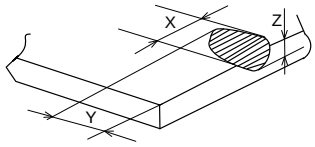	Chip on any other area-Front View X ≤ 0.5 mm Y ≤ 0.5 mm Z ≤ 1/2T Chip on any other area-Rear View X ≤ 1.5 mm Y ≤ 1.0 mm Z ≤ 1/2T
Corner flaw	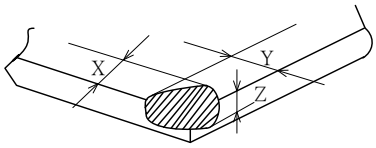	Chip on corner-Front View X ≤ 0.5 mm Y ≤ 0.5 mm Z ≤ T Chip on corner -Rear View X ≤ 1.0 mm Y ≤ 1.0 mm Z ≤ T
Progressive flaw	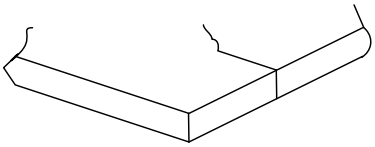	Not allowed

b) Chipping on the touch sensor (touch sensor glass)：

Item	Specifications	
Edge flaw	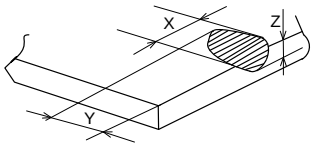	X ≤ 5.0 mm Y ≤ 3.0 mm Z ≤ T
Corner flaw	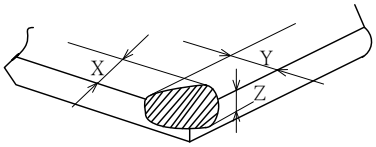	X ≤ 5.0 mm Y ≤ 5.0 mm Z ≤ T
Progressive flaw	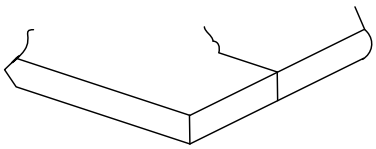	Not allowed

13. PRECAUTIONS

13.1 PRECAUTIONS of ESD

1) Before handling the display, please ensure your body has been connected to ground to avoid any damages by ESD. Also, do not touch display's interface directly when assembling.

2) Please remove the protection film very slowly before turning on the display to avoid generating ESD.

13.2 PRECAUTIONS of HANDLING

1) In order to keep the appearance of display in good condition, please do not rub any surfaces of the displays by sharp tools harder than 3H, especially touch panel, metal frame and polarizer.

2) Please do not pile the displays in order to avoid any scars leaving on the display. In order to avoid any injuries, please pay more attention for the edges of glasses and metal frame, and wear finger cots to protect yourself and the display before working on it.

3) Touching the display area or the terminal pins with bare hand is prohibited. This is because it will stain the display area and cause poor insulation between terminal pins, and might affect display's electrical characteristics furthermore.

4) Do not use any harmful chemicals such as acetone, toluene, and isopropyl alcohol to clean display's surfaces.

5) Please use soft cloth or absorbent cotton with ethanol to clean the display by gently wiping. Moreover, when wiping the display, please wipe it by horizontal or vertical direction instead of circling to prevent leaving scars on the display's surface, especially polarizer.

6) Please wipe any unknown liquids immediately such as saliva, water or dew on the display to avoid color fading or any permanently damages.

7) Maximum pressure to the surface of the display must be less than 1.96×10^4 Pa. If the area of adding pressure is less than 1 cm^2, the maximum pressure must be less than 1.96N.

13.3 PRECAUTIONS OF OPERATING

1) Please input signals and voltages to the displays according to the values defined in the section of electrical characteristics to obtain the best performance. Any voltages over than absolute maximum rating will cause permanent damages to this display. Also, any timing of the signals out of this specification would cause unexpected performance.

2) When the display is operating at significant low temperature, the response time will be slower than it at 25 C°. In high temperature, the color will be slightly dark and blue compared to original pattern. However, these are temperature-related phenomenon of LCD and it will not cause permanent damages to the display when used within the operating temperature.

3) The use of screen saver or sleep mode is recommended when static images are likely for long periods of time. This is to avoid the possibility of image sticking.

4) Spike noise can cause malfunction of the circuit. The recommended limitation of spike noise is no bigger than $\pm$ 100 mV.

13.4 PRECAUTIONS of STORAGE

If the displays are going to be stored for years, please be aware the following notices.

1) Please store the displays in a dark room to avoid any damages from sunlight and other sources of UV light.

2) The recommended long term storage temperature is between 10℃~35℃ and 55%~75% humidity to avoid causing bubbles between polarizer and LCD glasses, and polarizer peeling from LCD glasses.

3) It would be better to keep the displays in the container, which is shipped from JDI, and do not unpack it.

4) Please do not stick any labels on the display surface for a long time, especially on the polarizer.

14. DESIGNATION of LOT MARK

1) The lot mark is showing in Fig.14.1. First 4 digits are used to represent production lot, T represented made in Taiwan, and the last 6 digits are the serial number.

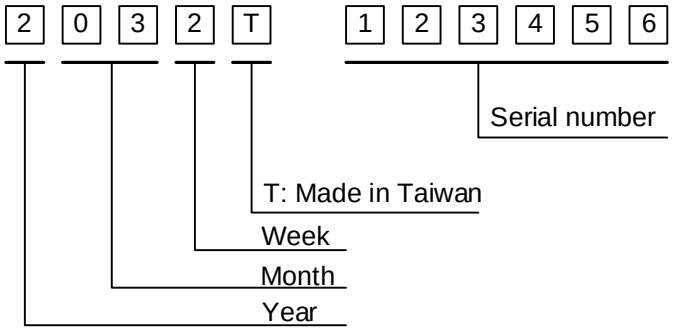

Fig. 14.1

2) The tables as below are showing what the first 4 digits of lot mark are shorted for.

Year	Lot Mark
2022	2
2023	3
2024	4
2025	5
2026	6

Month	Lot Mark	Month	Lot Mark
Jan.	01	Jul.	07
Feb.	02	Aug.	08
Mar.	03	Sep.	09
Apr.	04	Oct.	10
May	05	Nov.	11
Jun.	06	Dec.	12

Week	Lot Mark
1~7 days	1
8~14 days	2
15~21 days	3
22~28 days	4
29~31 days	5

3) Except letters I and O, revision number will be shown on lot mark and following letters A to Z.

4) The location of the lot mark is on the back of the display shown in Fig. 14.2.

Label example:

Fig. 14.2